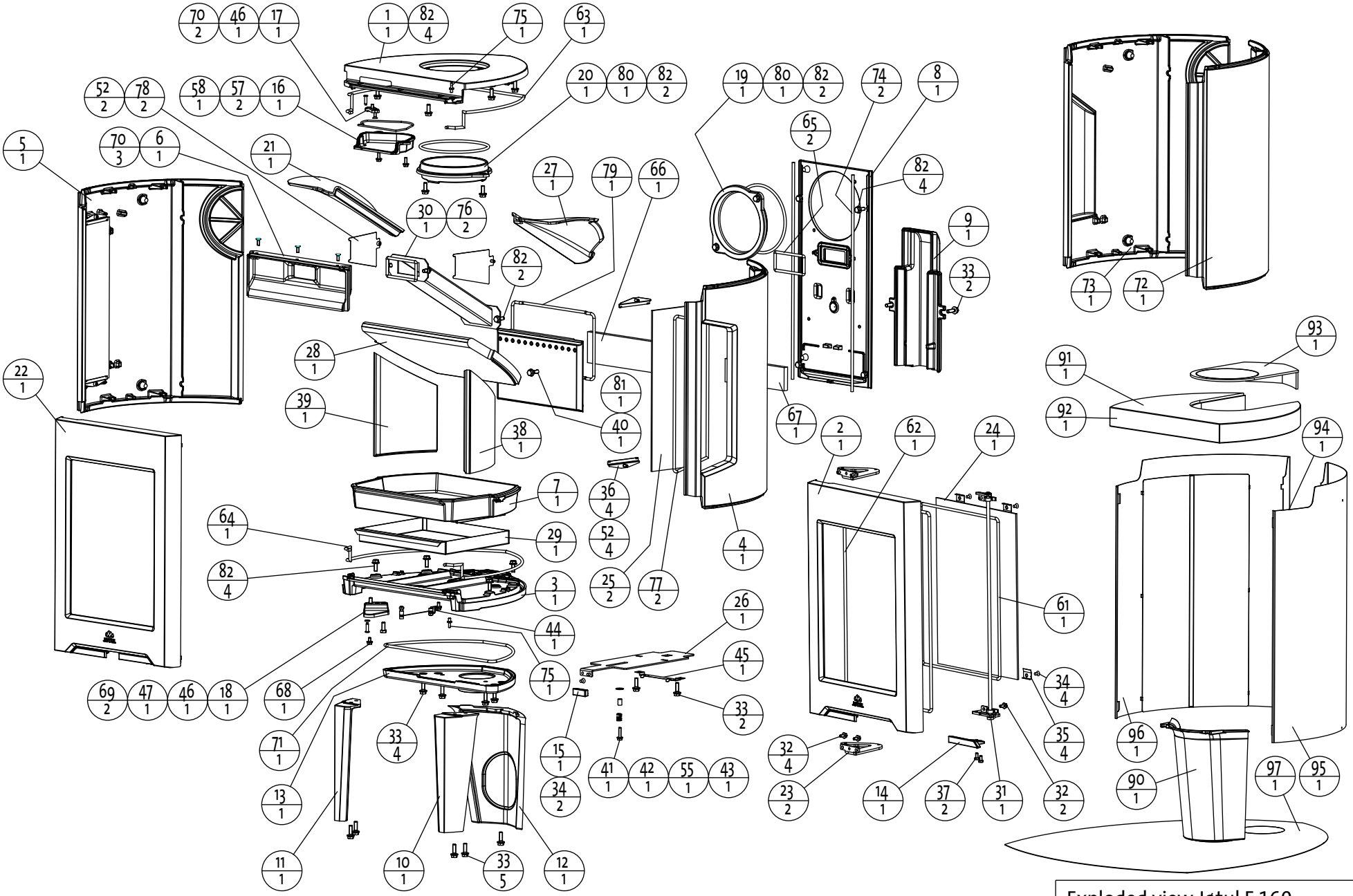

Exploded view Jøtul F 160		
Jøtul AS Fredrikstad, Norway	Drawing.no: 900049-P00	Date: June 2010